POWER RAIL PIN NUMBERS

CCT REF	DEVICE	+5VE	GND	+5VB	
IC401,402	HC374	20	10		
IC420	F161		8	16	
IC421	HC4040	16	8		
IC422	HC390	16	8		
IC423	HC161	16	8		
IC424	HC157	16	8		
IC425	HC153	16	8		
IC426	CD4046	16	8		
IC427	F374		10	20	
IC430	F04		7	14	
IC431	F86		7	14	
IC432	HC132	14	7		
IC101	MC1648		7,8	1,14	

CCT REF	DEVICE	-5VF	0VF	-10VF	-15VF
IC418	LS74	14	7		
IC419	LS00			14	

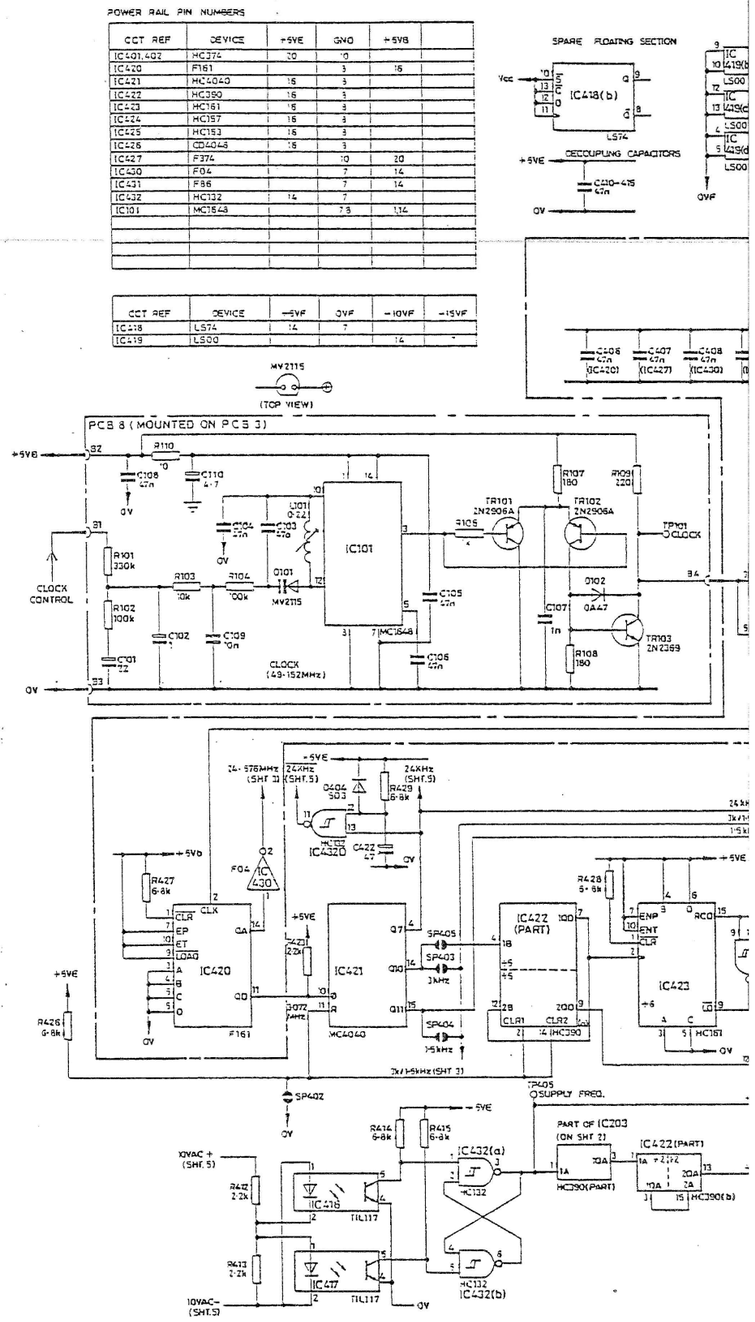

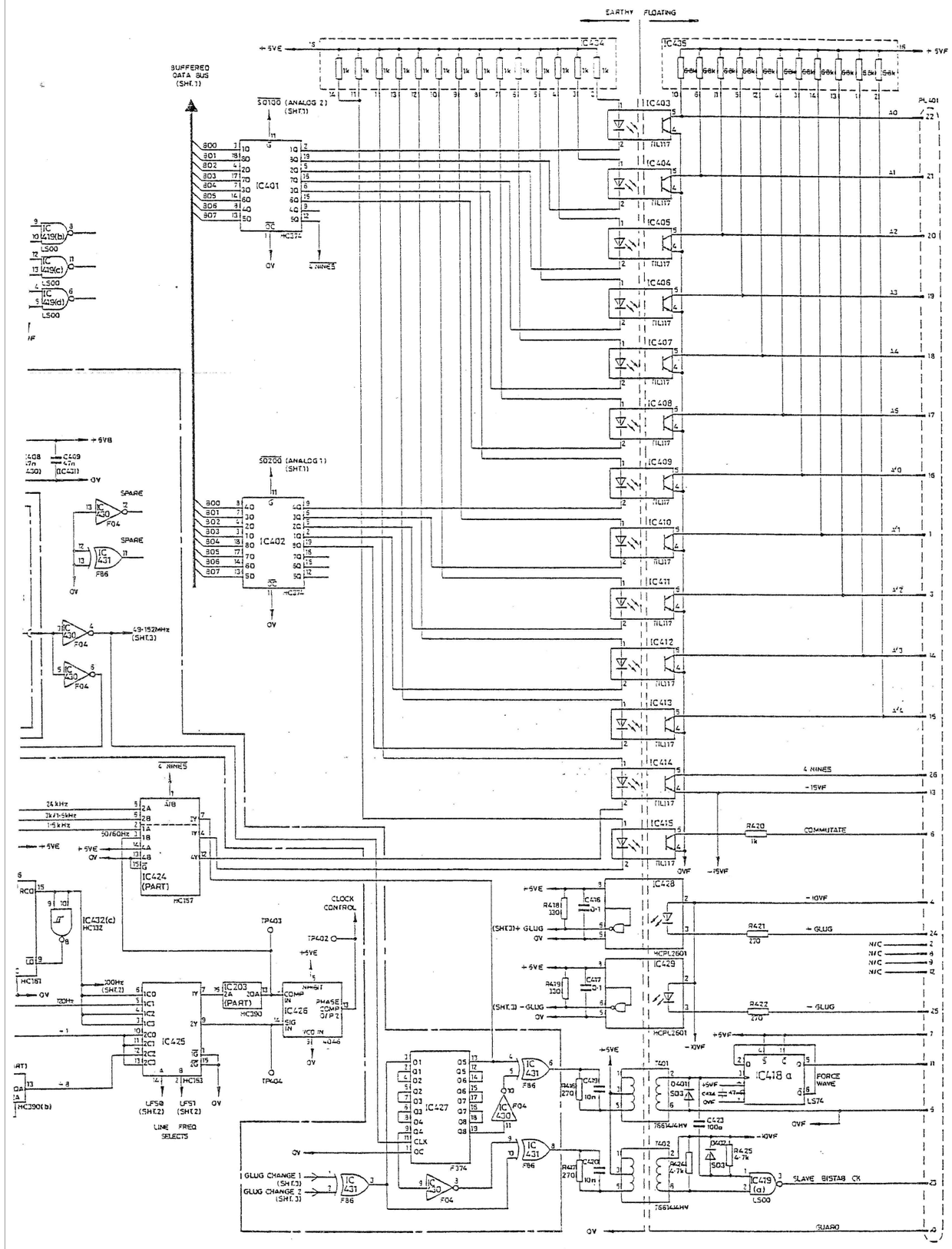

Figure 6.3. *PCB 3 AND PCB 8, Sheet 4 of 5, Floating I/O & Clock. Circuit Diagram 70617503, Issue H.*

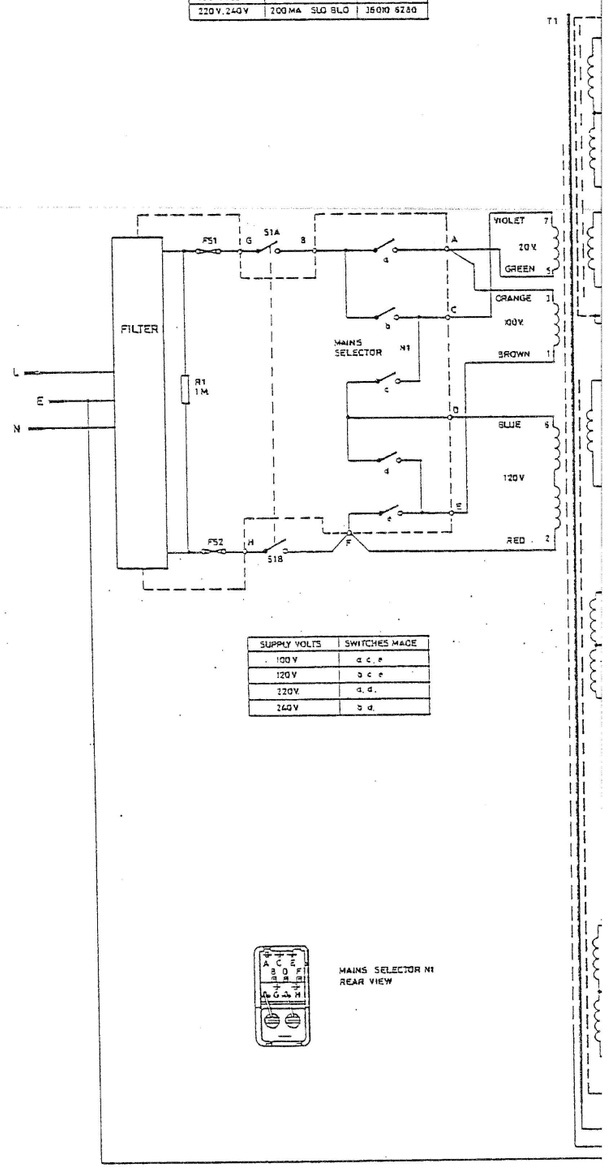

SUPPLY VOLTS	FUSE	PART No.
100 V, 120 V	400 MA SLO BLO	35010 6500
220 V, 240 V	200 MA SLO BLO	35010 6280

SUPPLY VOLTS	SWITCHES MADE
100 V	a c, e
120 V	b c e
220 V	a, d,
240 V	b d,

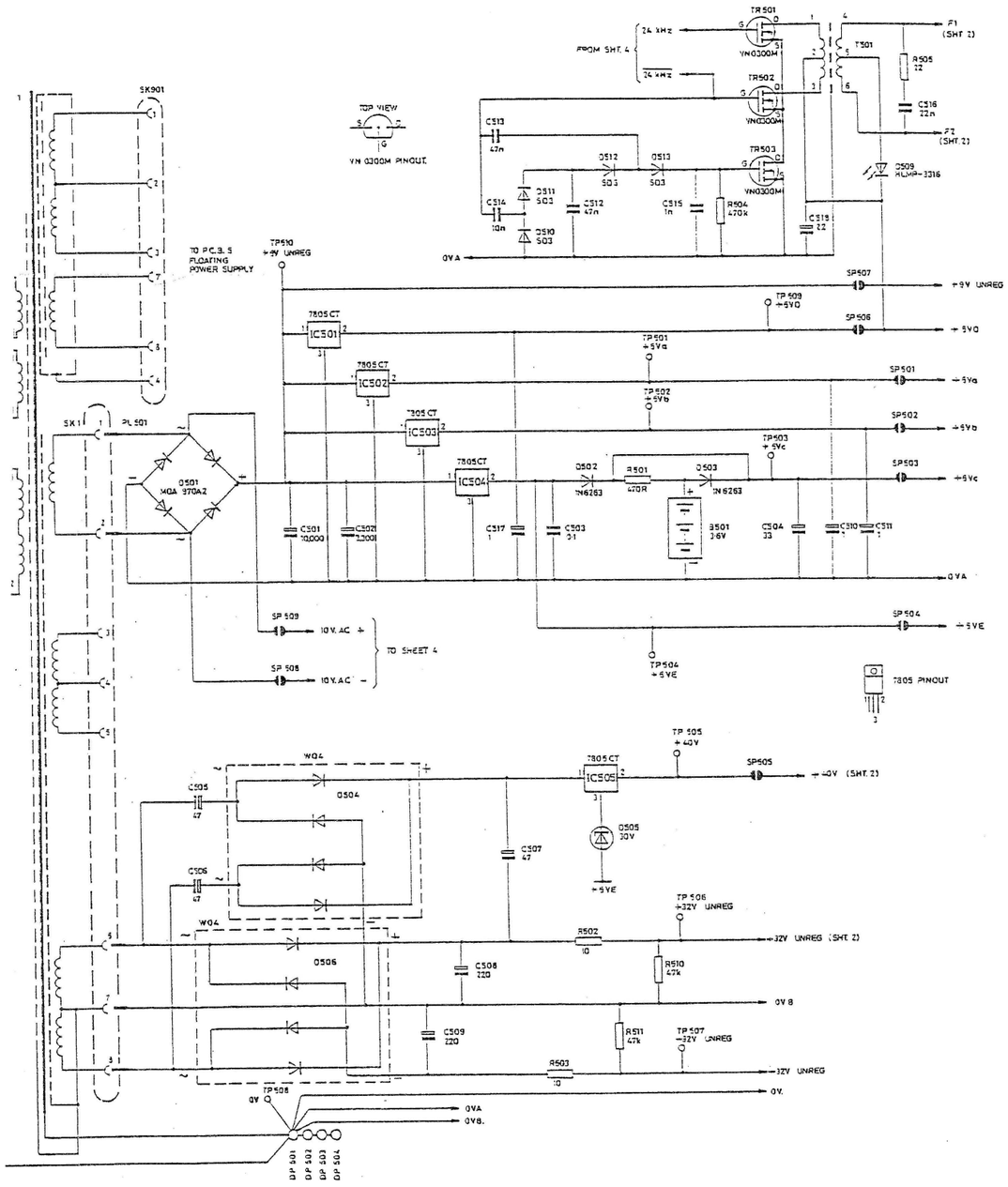

Figure 6.3. *PCB 3, Sheet 5 of 5, Power Supply. Circuit Diagram 70617503, Issue E.*

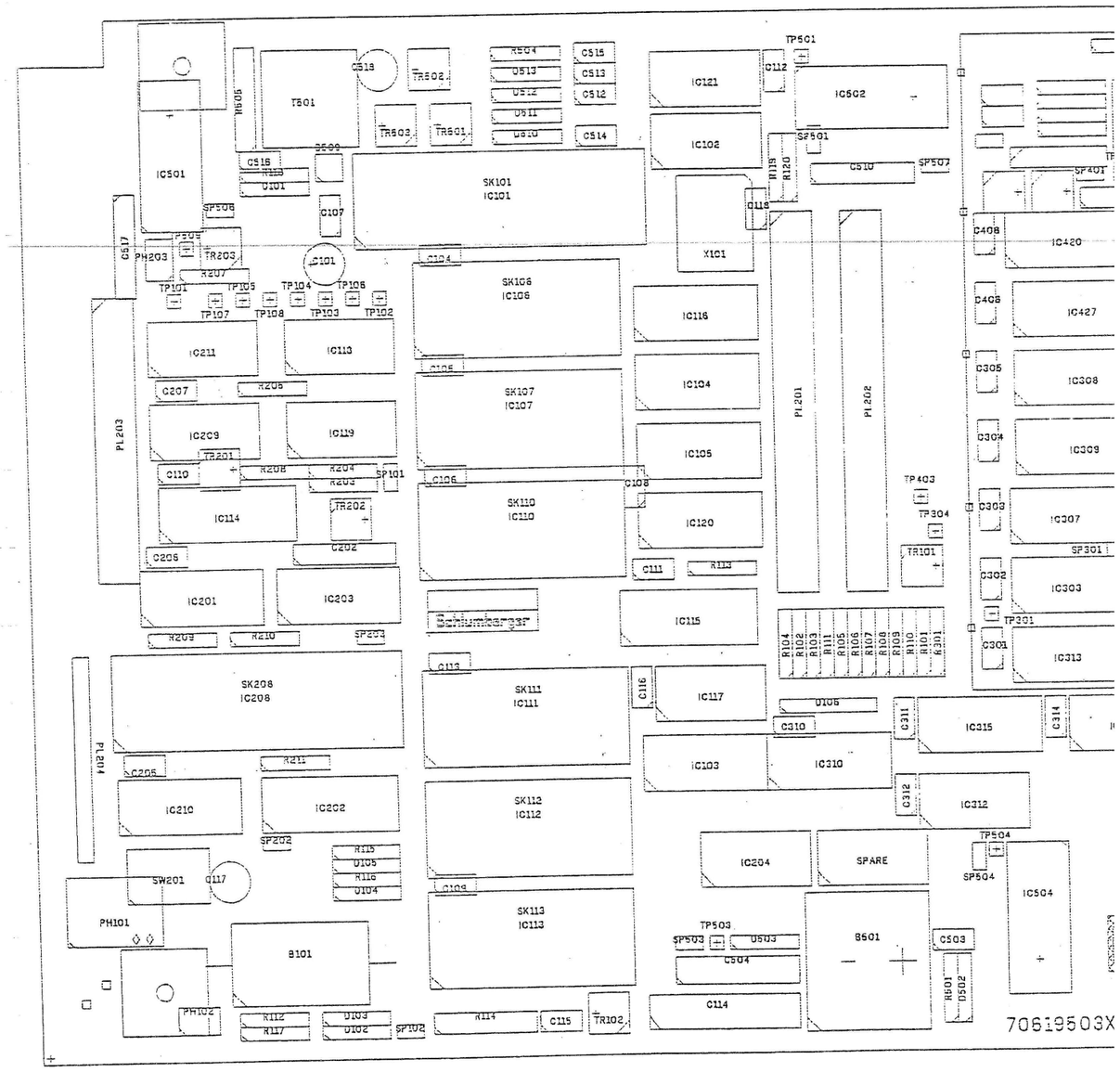

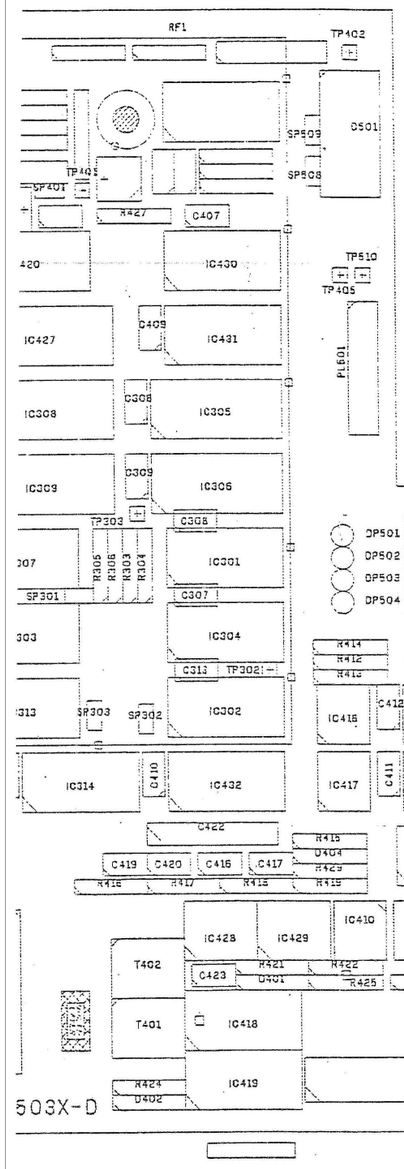

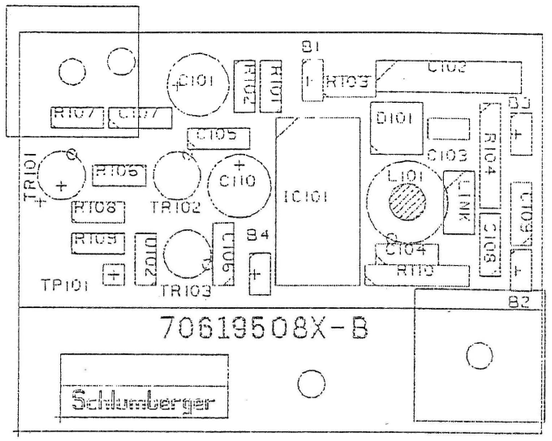

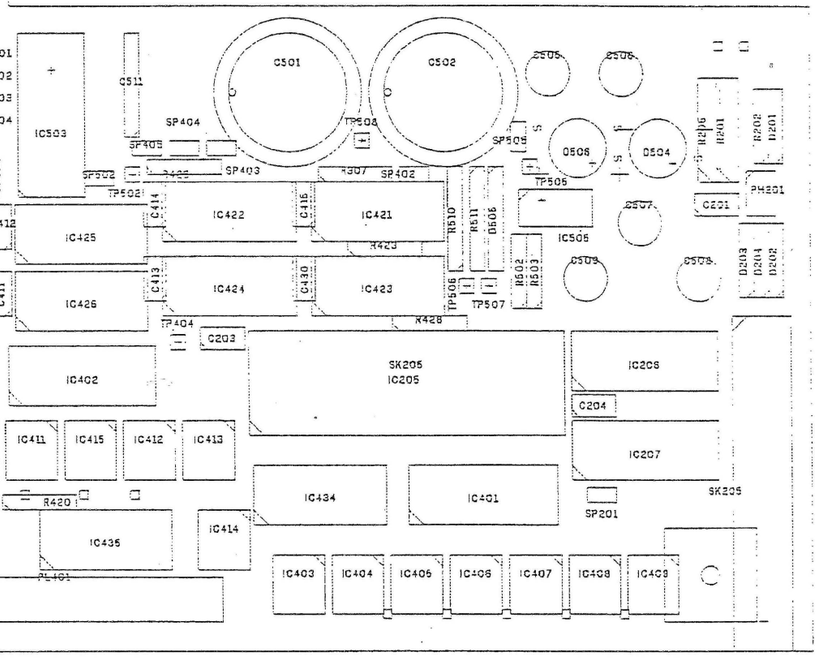

Figure 6.4. *PCB 3 and PCB 8, Component Layout*
PCB 3 (70610503) Issue D, PCB 8 (70610508) Issue B.

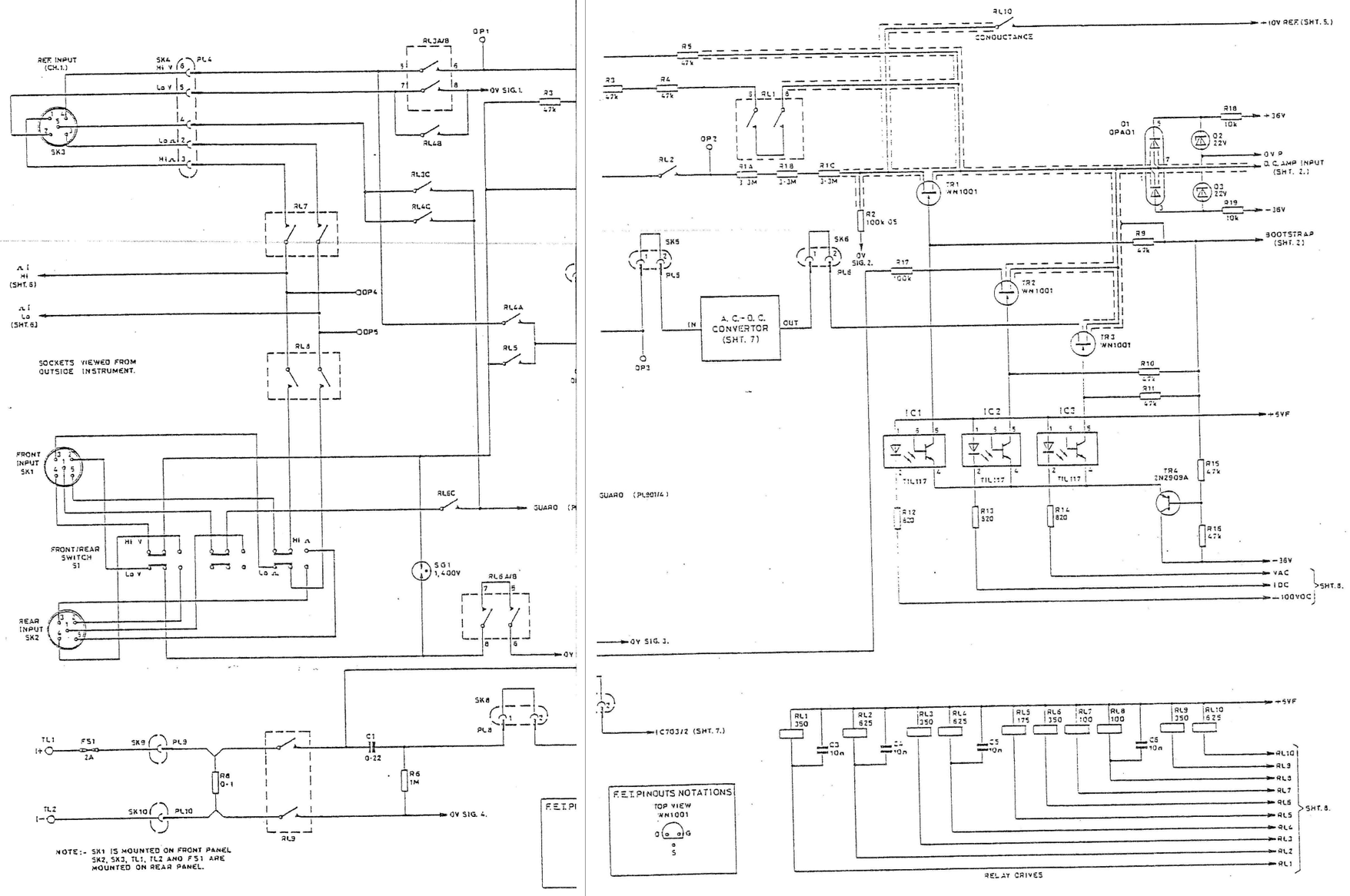

Figure 6.5. *PCB 5, Sheet 1 of 9, Input Switching, DC Volts Atten. & Current. Circuit Diagram 70617505, Issue P.*

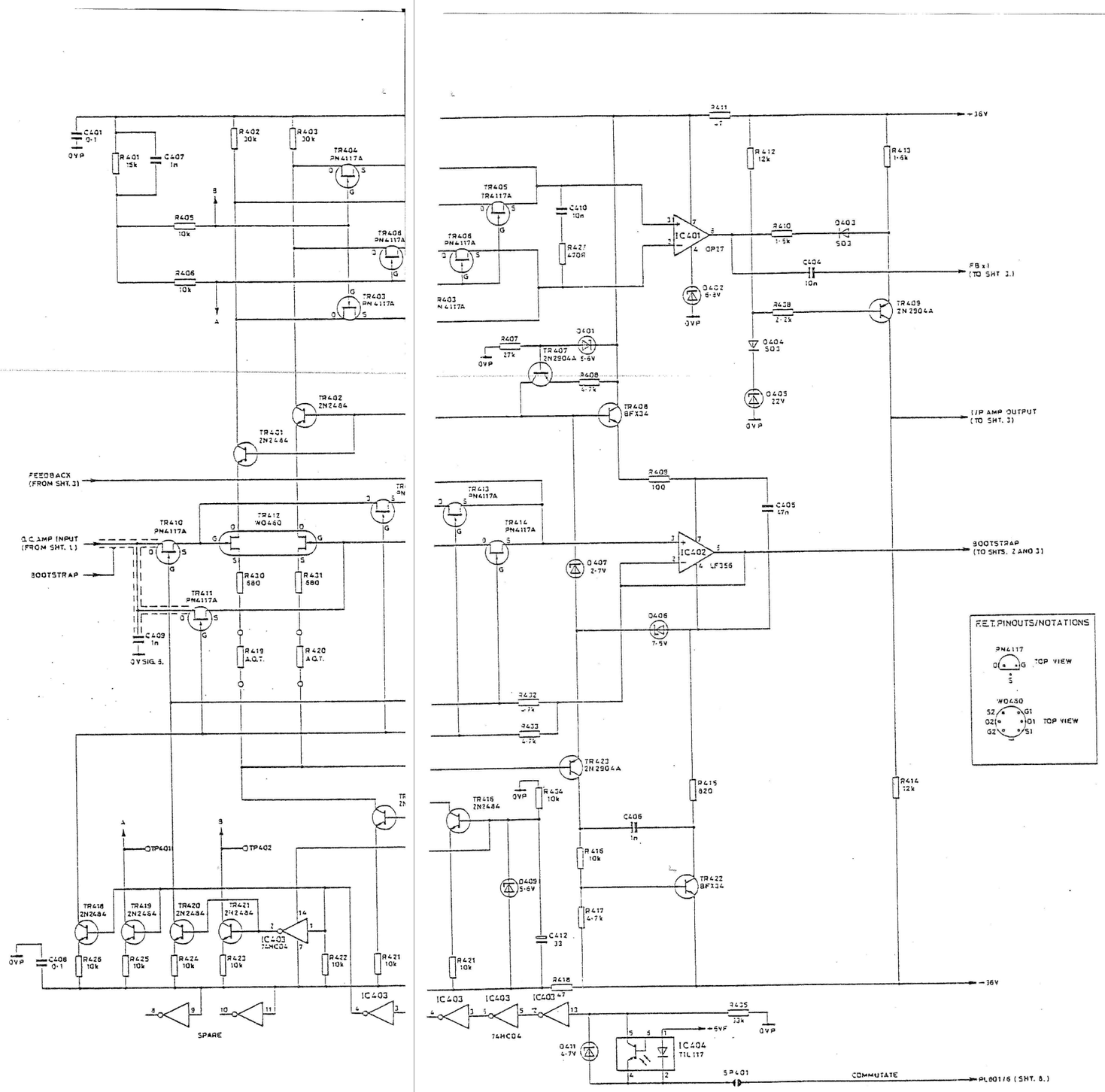

Figure 6.5. *PCB 5, Sheet 2 of 9, DC Input Amplifier. Circuit Diagram 70617505, Issue J.*

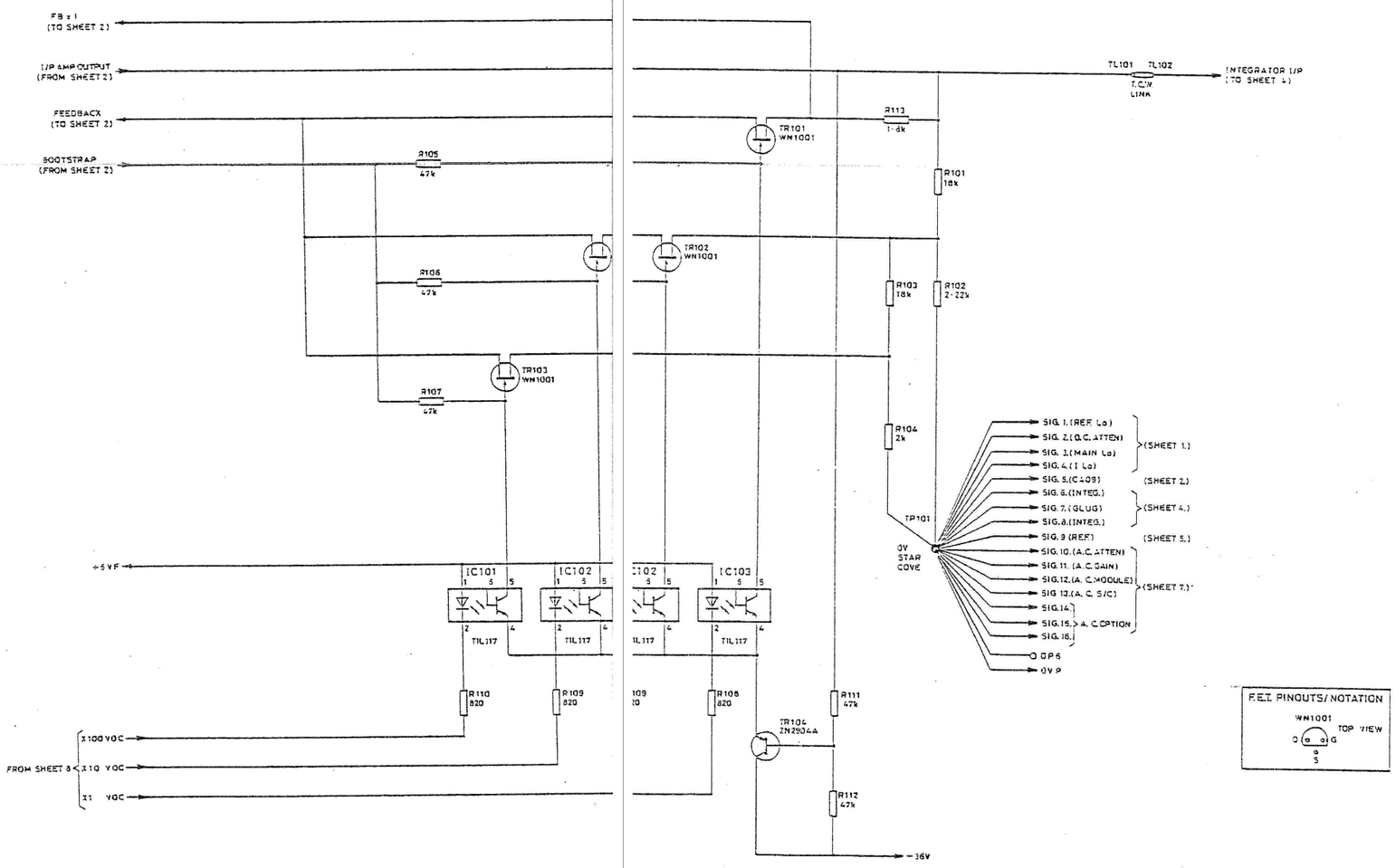

Figure 6.5. *PCB 5, Sheet 3 of 9, DC Ranging. Circuit Diagram 70617505, Issue D.*

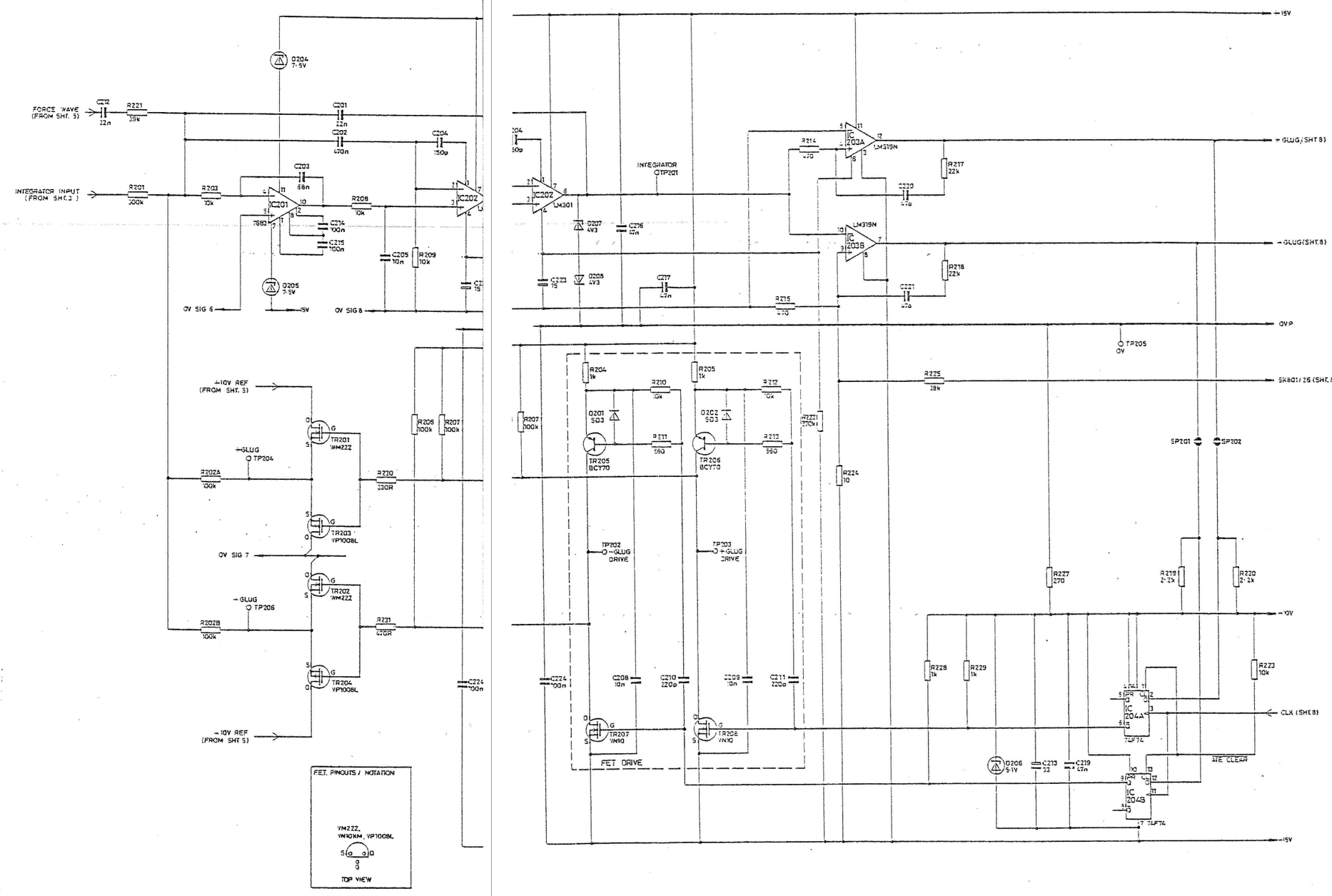

Figure 6.5. *PCB 5, Sheet 4 of 9, Integrator. Circuit Diagram 70617505, Issue K.*

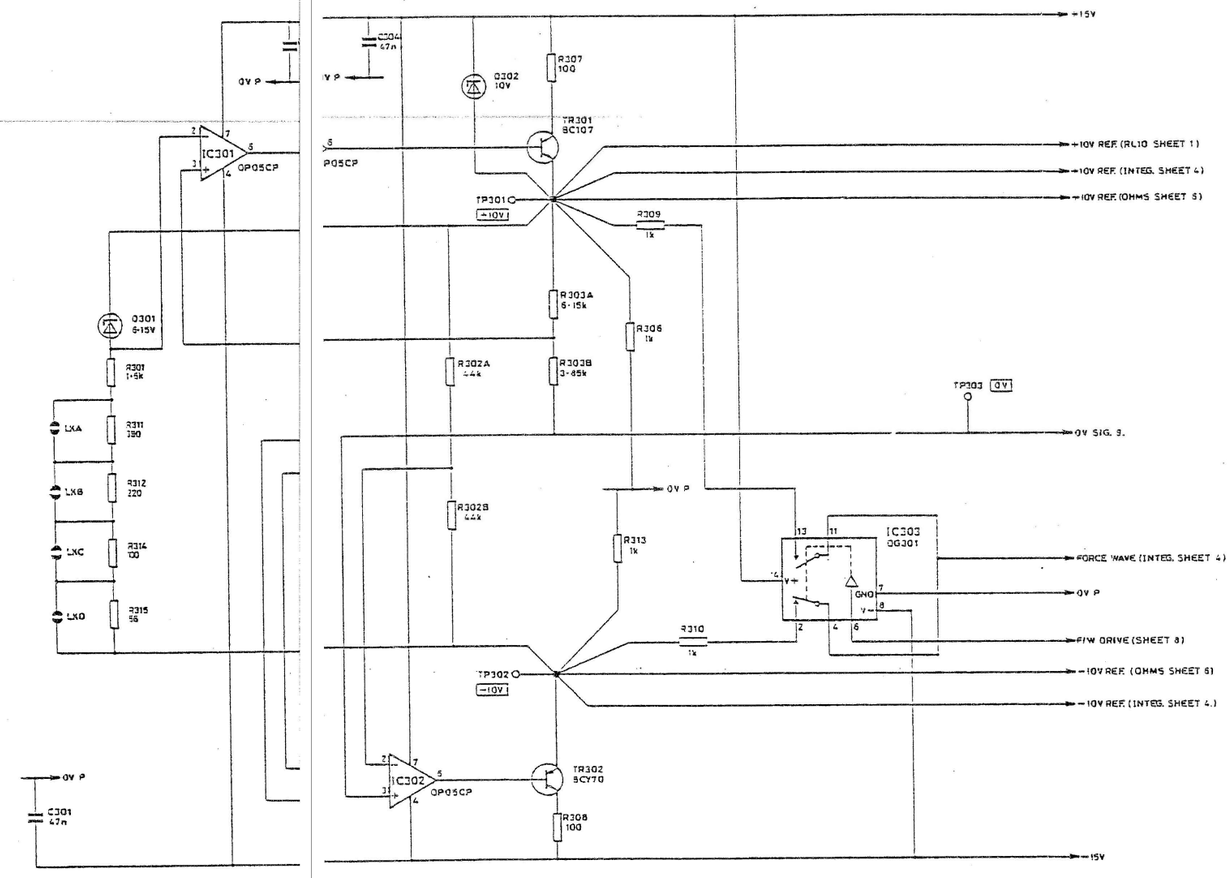

Figure 6.5. *PCB 5, Sheet 5 of 9, Reference. Circuit Diagram 70617505, Issue G.*

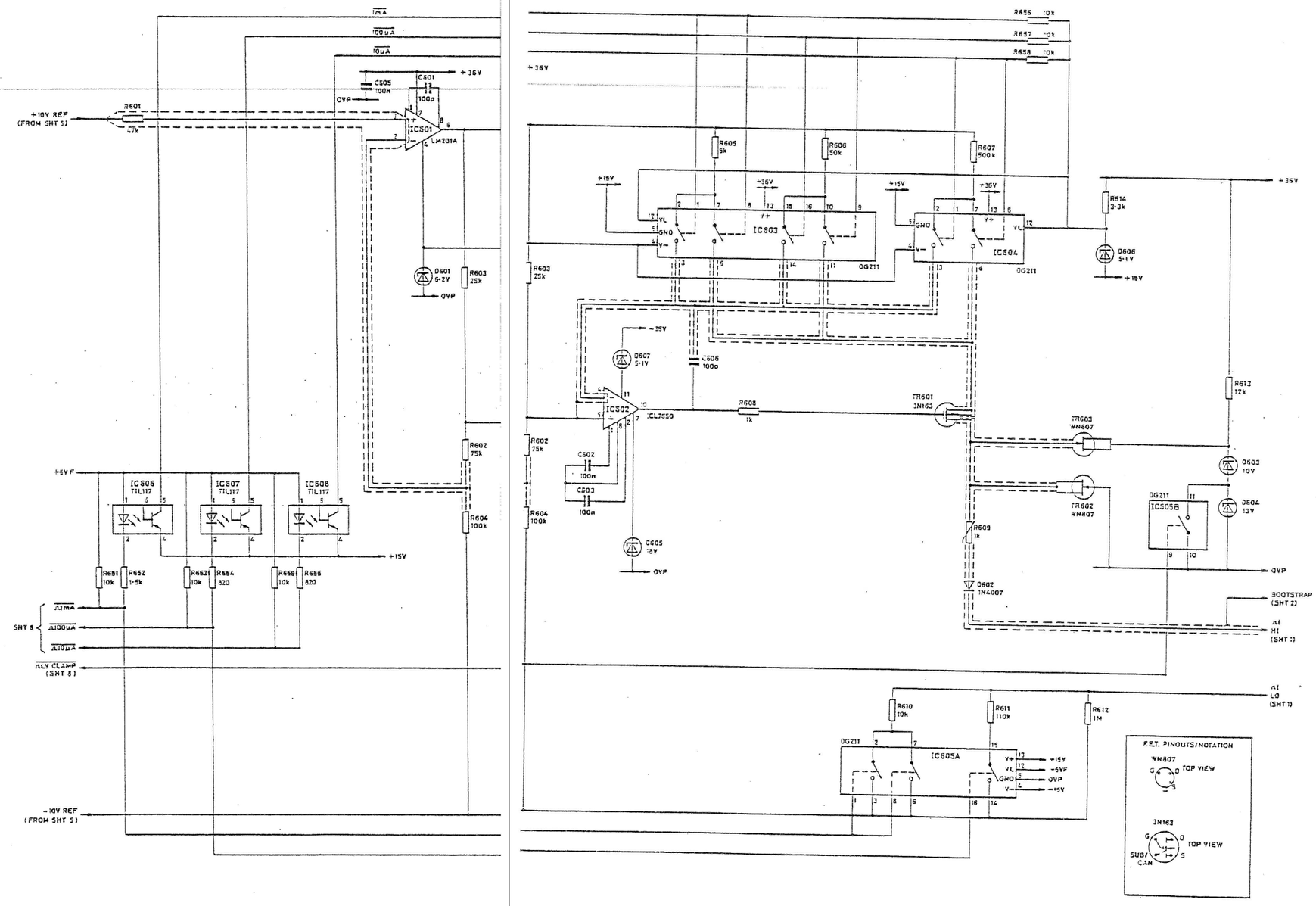

Figure 6.5. *PCB 5, Sheet 6 of 9, Ohms Current Source. Circuit Diagram 70617505, Issue F.*

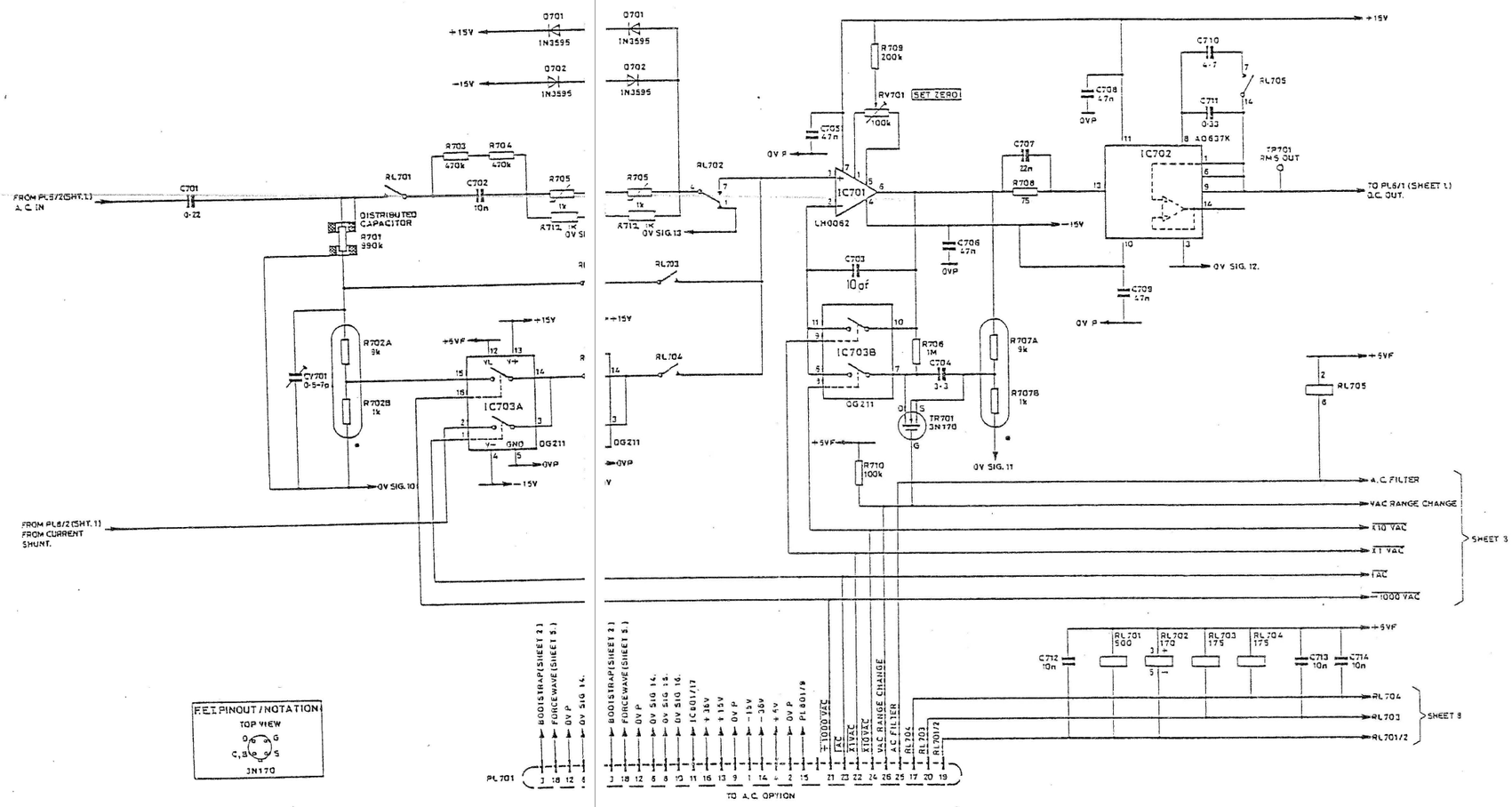

Figure 6.5. *PCB 5, Sheet 7 of 9, AC True rms. Circuit Diagram 70617505, Issue F.*